TECHNICAL INFORMATION

Model No. ► JR100D/ JR102D

Description ► 10.8V Cordless Recipro Saw

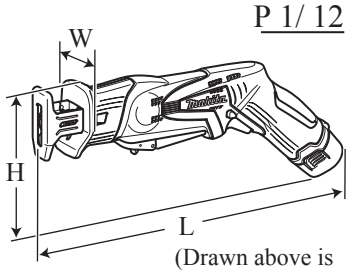

(Drawn above is Model JR100D.)

Dimensions: mm (")	
Length (L)	355 (14)
Width (W)	63 (2-1/2)
Height (H)	146 (5-3/4)

CONCEPT AND MAIN APPLICATIONS

Model JR100D/ JR102D are compact and lightweight 10.8V cordless recipro saws; JR100D is equipped with Toolless blade clamp while JR102D is equipped with Blade clamp for both Recipro saw and Jig saw blades.
Their advantages are:

- Toolless blade clamp for Recipro saw blade (model JR100D only)
- Blade clamp compatible with both Recipro saw and Jig saw blades (model JR102D only)
- Compact and lightweight handy body for comfortable operation
- Multi-position switch enables various grip position for versatile operations.

These products are available in the following variations.

Model No.	Battery type	Battery quantity	Charger	Plastic carrying case	Hex wrench	Housing color	Offered to
JR100DZ	BL1013 (Li-ion 1.3Ah)	No	No	No	No	Makita-blue	All countries except North and Central American countries
JR100DWE		2	DC10WA	Yes			
---	BL1014 (Li-ion 1.3Ah)	No	No	No	No	Makita-blue	North and Central American countries
---						white	
---		2	DC10WB	Yes	No	Makita-blue	
---						white	
JR102DZ	BL1013 (Li-ion 1.3Ah)	No	No	No	Yes	Makita-blue	All countries except North and Central American countries
JR102DWE		2	DC10WA	Yes			

All models also include the accessories listed below in "Standard equipment".

► Specification

Model No.		JR100D	JR102D
Battery	Cell	Li-ion	
	Voltage: V	10.8, (10.8/12Vmax*2)	
	Capacity: Ah	1.3	
	Energy capacity: Wh	14	
	Charging time (approx.): min.	50 with DC10WA, (DC10WB*2)	
Strokes per minutes: min.$^{-1}$= spm (strokes per minute)		0 - 3,300	
Length of stroke: mm (")		13 (1/2)	
Capacity: mm (")	Wood	50 (2)	
	Pipe: Ø	50 (2)	
Blade clamp type		Toolless	Hex wrench is required.
Jig saw blade compatibility		No	Yes
Switch lock		Lock-off	
Electric brake		Yes	
Variable speed control by trigger		Yes	
LED job light		Yes	
Weight according to EPTA-Procedure 01/2003: kg (lbs)		1.2 (2.6)	1.1 (2.5)

***2:** for North and Central American countries

► Standard equipment

JR100D
[All countries]

Recipro saw blade 100mm (for wood) 1
Recipro saw blade 100mm (for metal) 1

JR102D
[All countries except Sweden, Finland, Estonia]

Recipro saw blade 100mm (for wood) 1
Recipro saw blade 100mm (for metal) 1
Hex wrench 3 1

JR102D
[Sweden, Finland, Estonia]

Jig saw blade B-10 (for wood) 1
Jig saw blade B-18 (for wood) 1
Jig saw blade B-24 (for metal) 1
Hex wrench 3 1

Note: The standard equipment for the tool shown above may vary by country.

► Optional accessories

Charger DC10WA (DC10WB for North and Central American countries)
Battery BL1013 (BL1014 for North and Central American countries)
Recipro saw blades, Jig saw blades (for JR102D only)

► Repair

CAUTION: Repair the machine in accordance with "Instruction manual" or "Safety instructions".

[1] NECESSARY REPAIRING TOOLS

Code No.	Description	Use for
1R132	Nose 15-20	removing Ball bearing 6902ZZ from Gear housing
1R258	V Block	holding Gear housing when removing 6902ZZ.
1R281	Round Bar for Arbor 7-50	removing Ball bearing 6902ZZ from Gear housing

[2] LUBRICATION

Apply **Makita grease N. No.2** to the following portions designated with the black triangles to protect parts and product from unusual abrasion.

Item No.	Description	Portion to lubricate	Amount
⑧	Shoulder pin 5	Whole surface of Pin for smooth twisting of Driving sleeve	a little
㉖	Slider	To the portion where Slider guide and Collared sleeve contacts	a little
㉘	Gear complete	ⓐ To the teeth portion	5 g
		ⓑ To the Pin portion	a little

Fig. 1

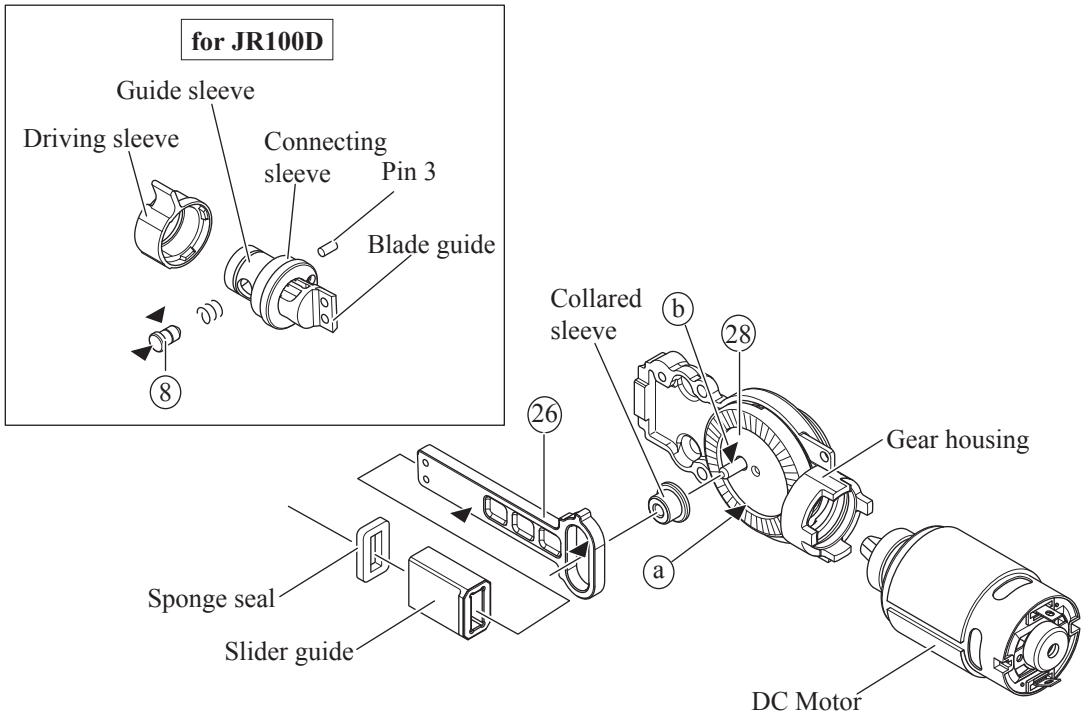

Repair

[3] DISASSEMBLY/ASSEMBLY
[3] -1. Slider (cont.)

DISASSEMBLING

Fig. 2

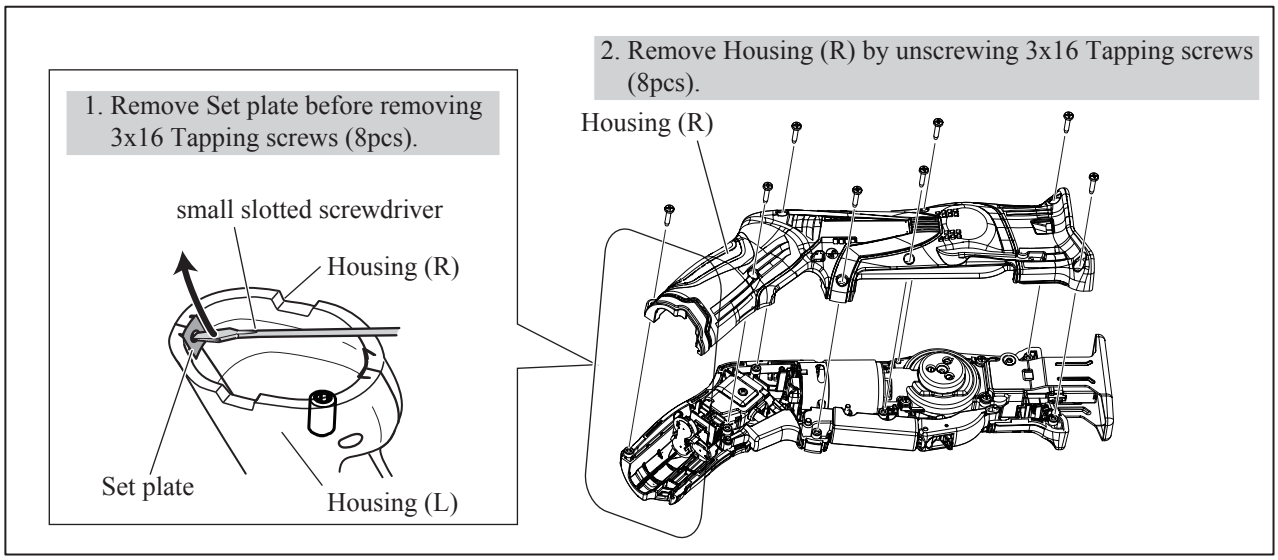

Fig. 3

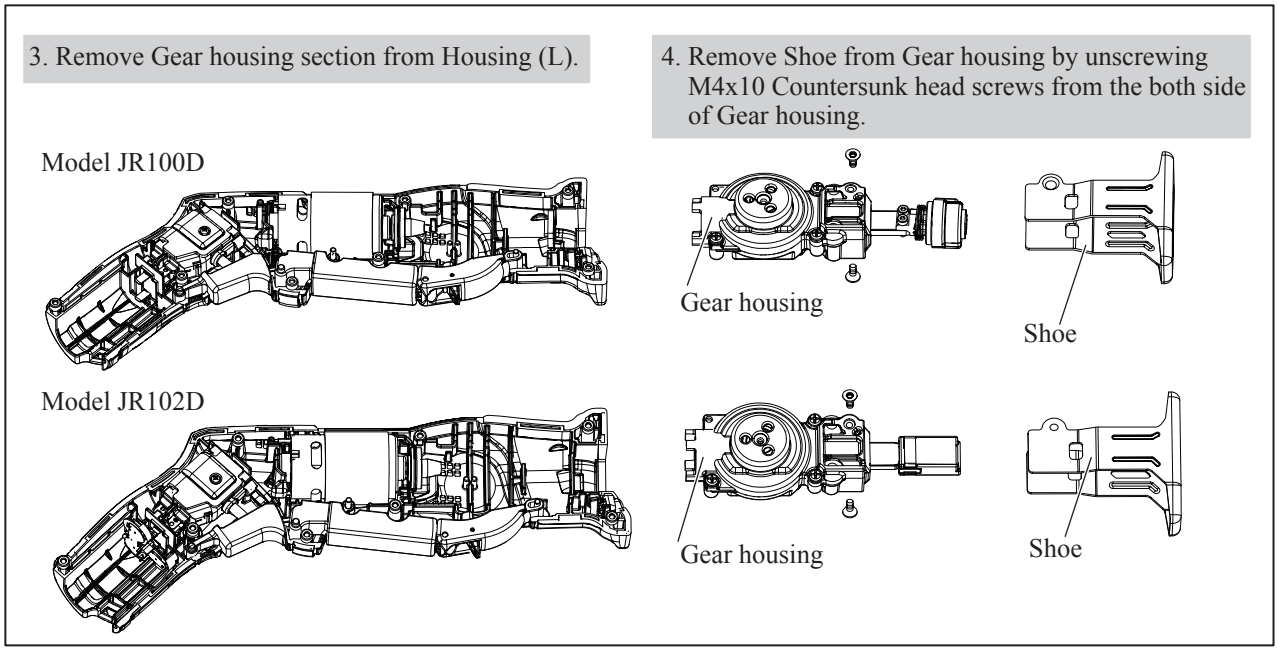

Fig. 4

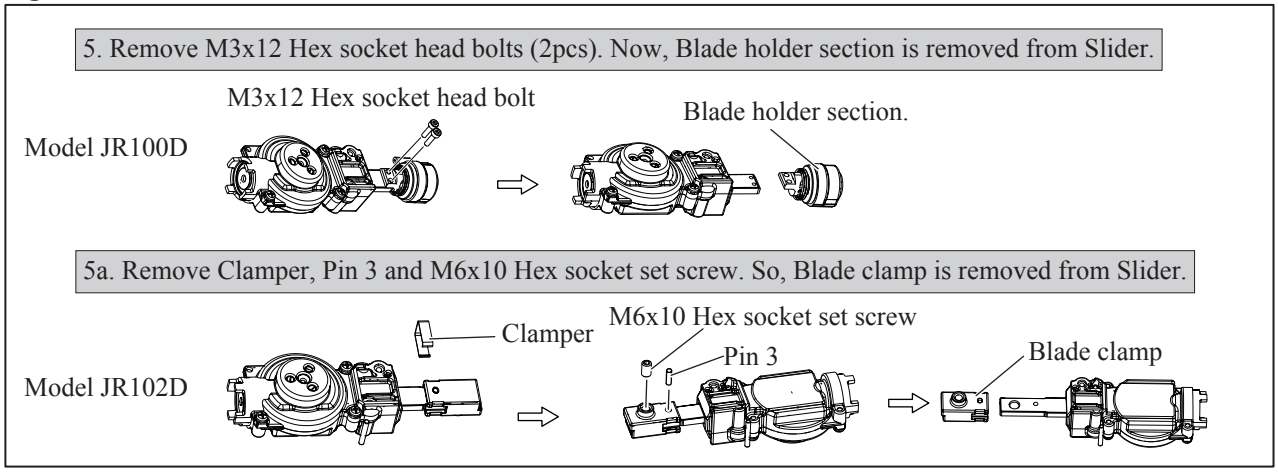

Repair

[3] DISASSEMBLY/ASSEMBLY
[3] -1. Slider (cont.)

DISASSEMBLING

Fig. 5

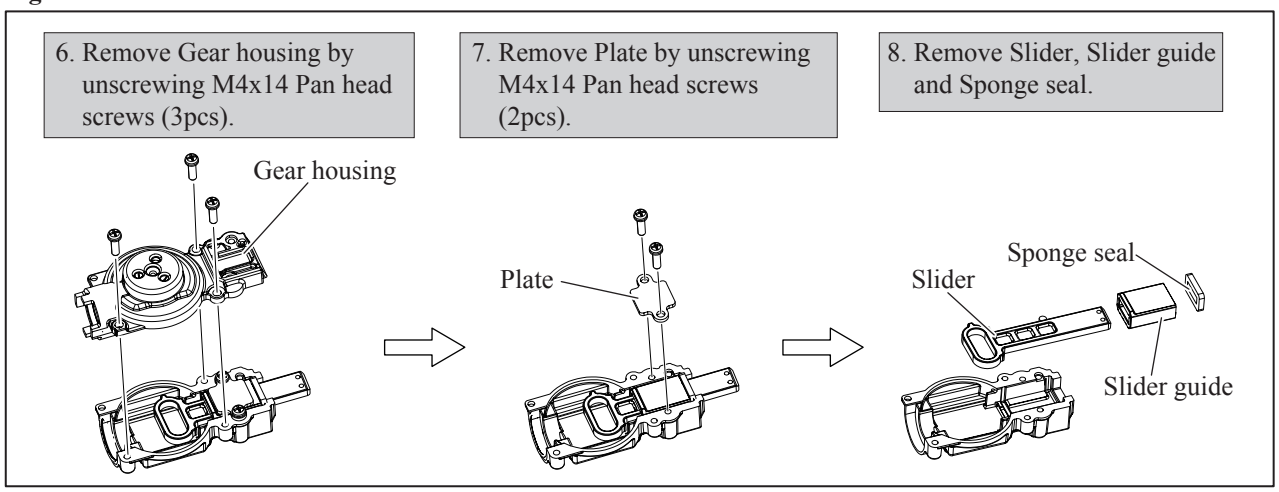

ASSEMBLING

(1) Assemble Slider guide and Sponge seal to Slider (**Fig. 6**).

Fig. 6

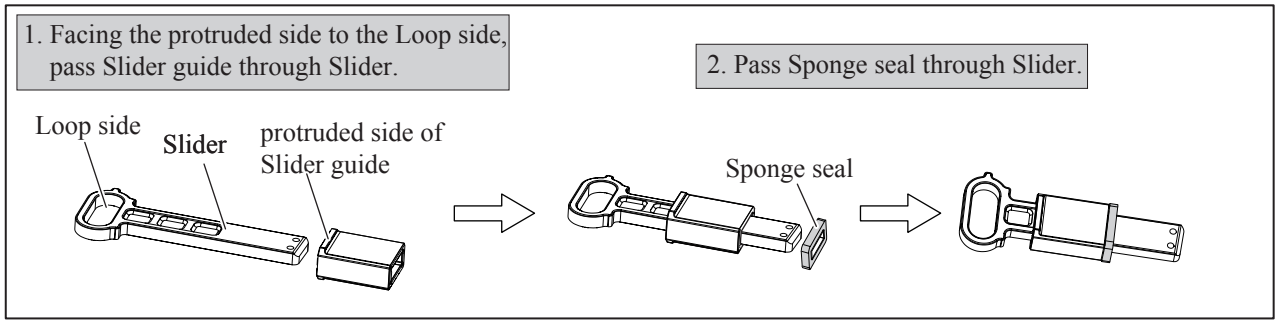

(2) Assemble the Slider to Gear housing cover (**Fig. 7**).

Fig. 7

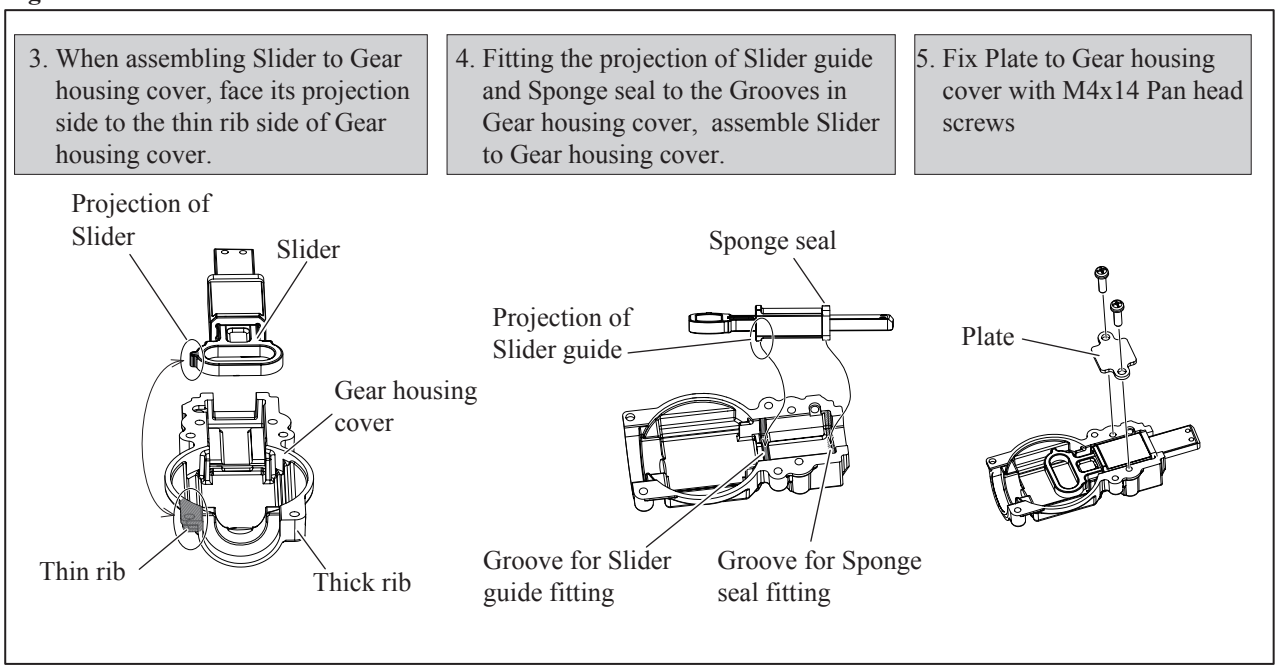

Repair

[3] DISASSEMBLY/ASSEMBLY

[3] -1. Slider (cont.)

ASSEMBLING

(3) Assemble Gear housing cover to Gear housing (**Fig. 8**).

Fig. 8

6. Set the following parts to the nearest point to the DC Motor side as illustrated below.
   * Collared sleeve 4 on Gear complete
   * Loop portion of Slider

7. Assemble Gear housing cover to Gear housing while aligning Collared sleeve 4 into Loop portion of Slider and fix them with 4x14 Pan head screws (3pcs).

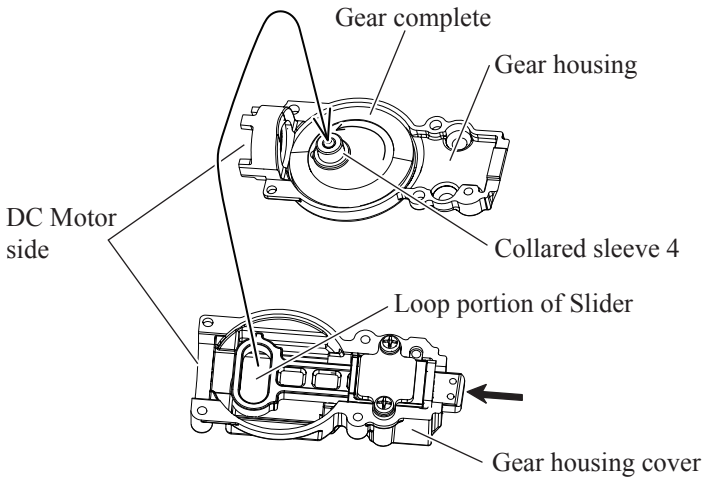

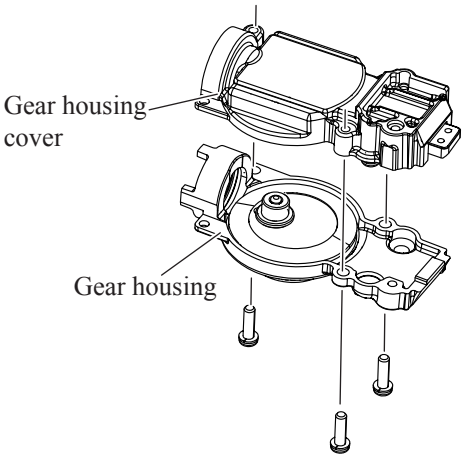

(4) Assemble Blade holder section or Blade clamp to Slider (**Fig. 9**).

Fig. 9

For JR100D

8. Assemble Blade holder section to Slider.

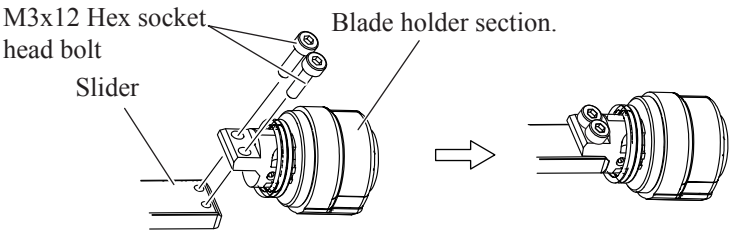

For JR102D

8a. Set Blade clamp to Slider while aligning its Screw hole to Concave on Slider. So, its small hole for Pin 3 is aligned to the same on Slider automatically.

9a. Pass Pin 3 through Blade clamp and Slider.

10a. Assemble Clamper to Blade clamp.
Do not approach from the Cut portion side of Blade clamp when assembling.

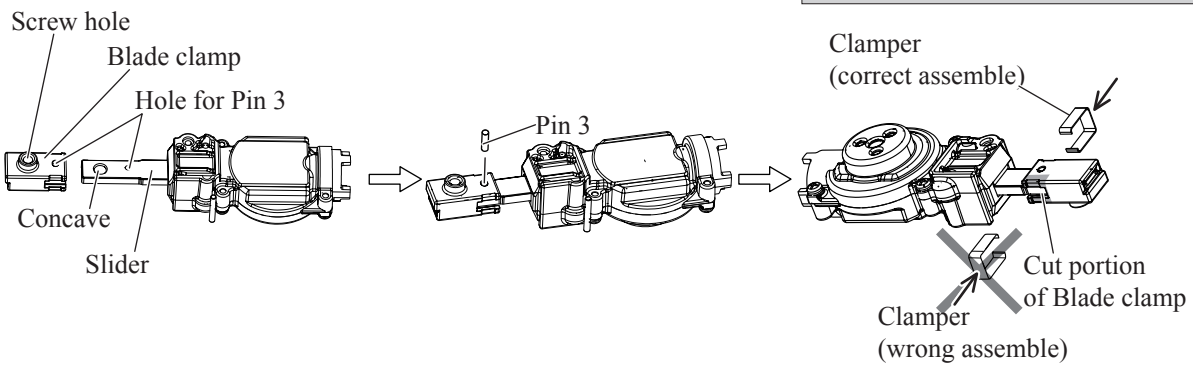

Repair

[3] DISASSEMBLY/ASSEMBLY

[3] -2. Gear complete

DISASSEMBLING

(1) Disassemble Housing (R) from Housing (L) and remove Gear housing section from Housing (L) (**Fig. 2, 3, 4.**)
(2) Remove Gear housing from Gear housing cover (**Fig. 5**-6).
(3) Put Gear housing on 1R258 and remove Gear complete with Arbor press (**Fig. 10** or **Fig. 10A**).

Fig. 10

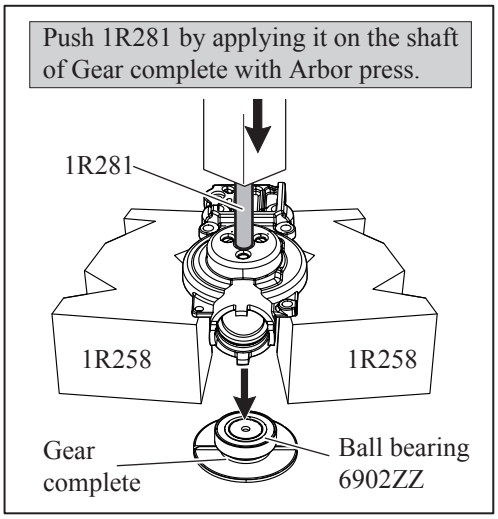

Fig. 10A

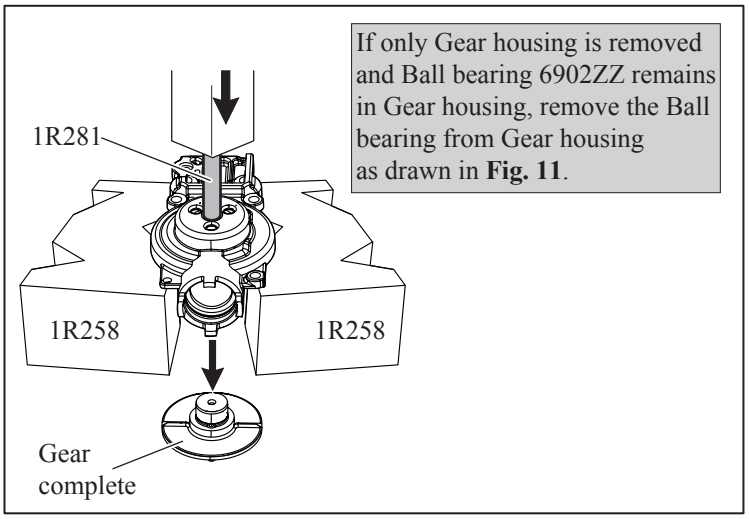

(4) Remove Ball bearing 6902ZZ by applying 1R132 to the inner ring of Ball bearing 6902ZZ (**Fig. 11**).

Fig. 11

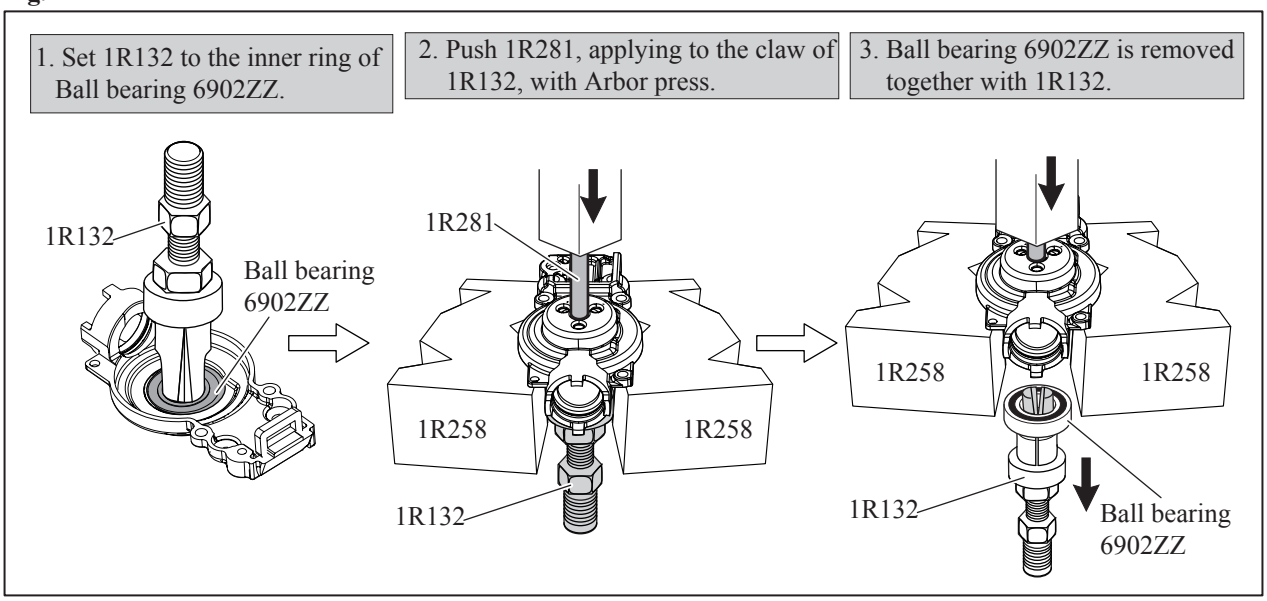

ASSEMBLING

(1) Assemble Ball bearing 6902ZZ to Gear housing (**Fig. 11**).
(2) Assemble Gear complete to the Ball bearing 6902ZZ (**Fig. 10A).**

Repair

[3] DISASSEMBLY/ASSEMBLY

[3] -3. Toolless Blade Holder Section (Model JR100D)

DISASSEMBLING

(1) Disassemble Housing (R) from Housing (L) and remove Gear housing section from Housing (L) (**Fig. 2, 3**).
(2) Remove Shoe from Gear section by unscrewing M4x10 Countersunk head screws (**Fig. 3**).
(3) Disassemble Toolless blade holder section (**Fig. 12**).

Fig. 12

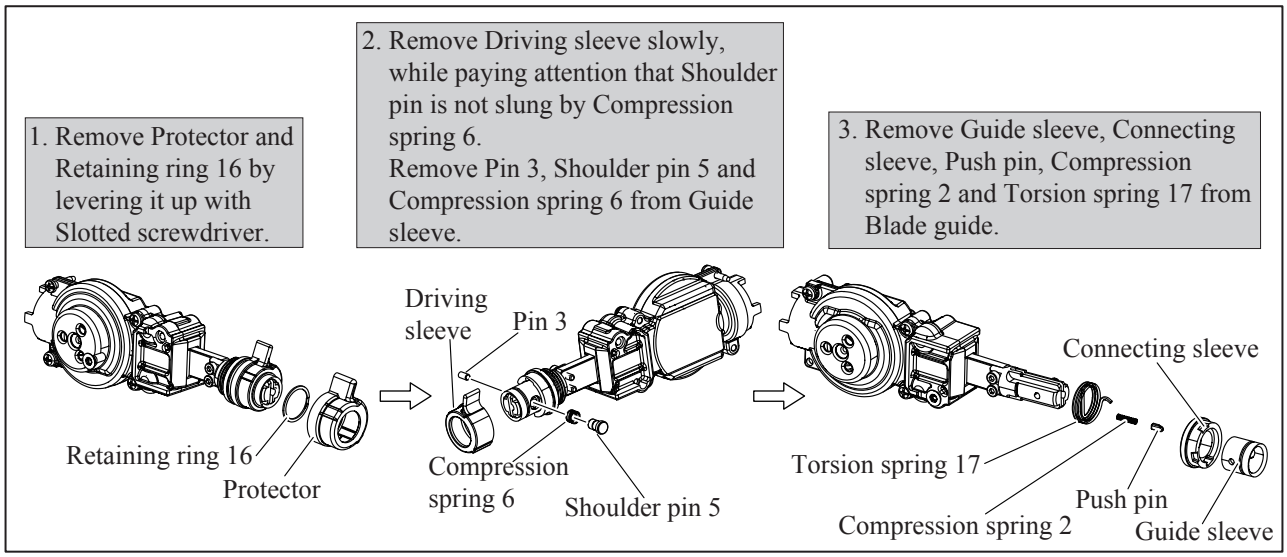

ASSEMBLING

(1) Assemble Blade guide to Slider (**Fig. 9**) in case Blade guide is removed from Slider.
(2) Mount Torsion spring 17 and Connecting sleeve to Blade guide. And then, inert Compression spring 2 and push pin (**Fig. 13**).

Fig. 13

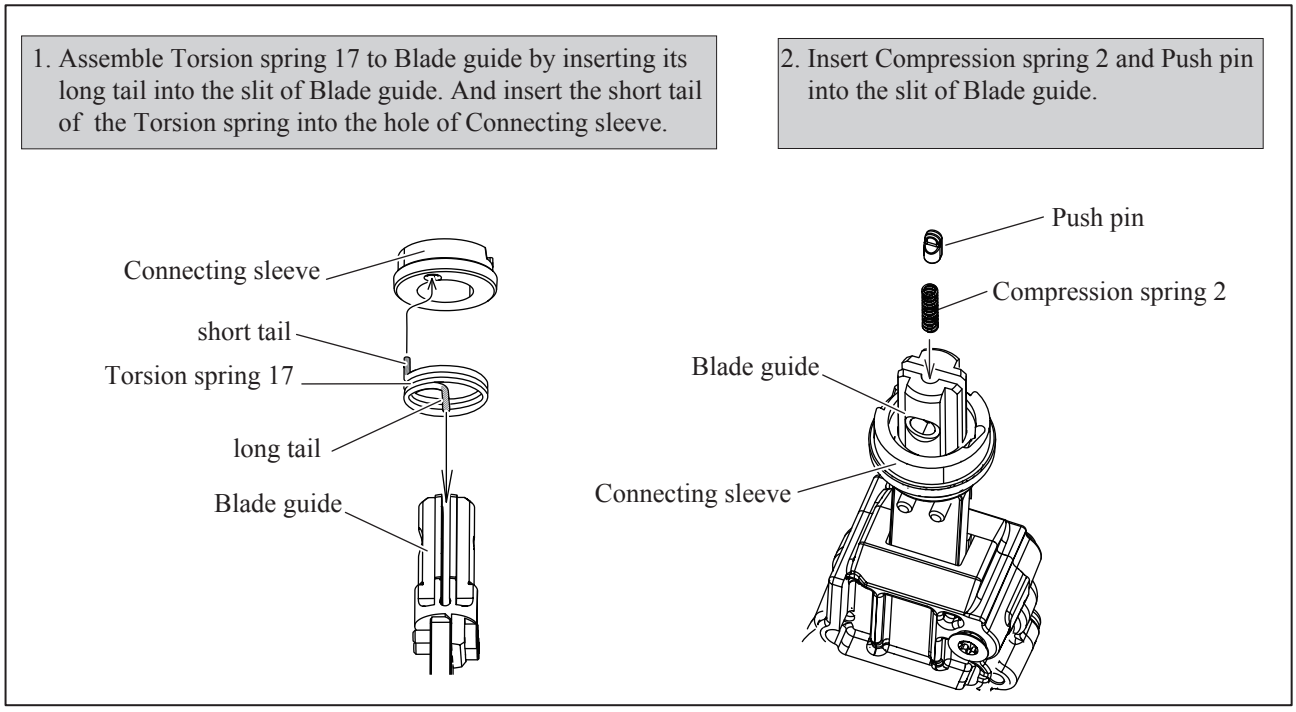

Repair

[3] DISASSEMBLY/ASSEMBLY

[3] -3. Toolless Blade Holder Section (Model JR100D) (cont.)

ASSEMBLING

(2) Do further step for Assembling in the order of **Fig. 14**, **15**, **16**, **17**, **18**.

Fig. 14

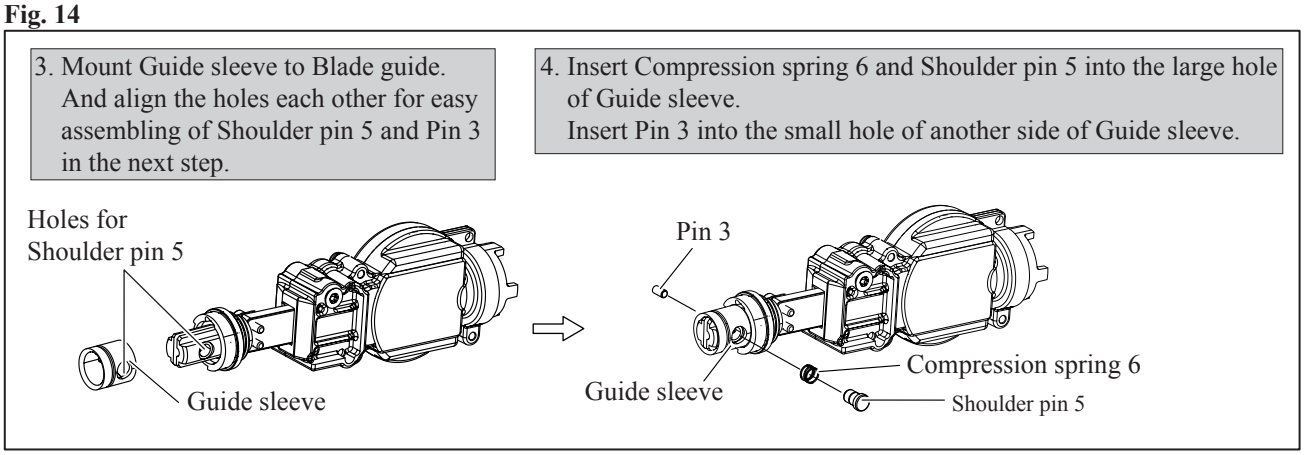

Fig. 15

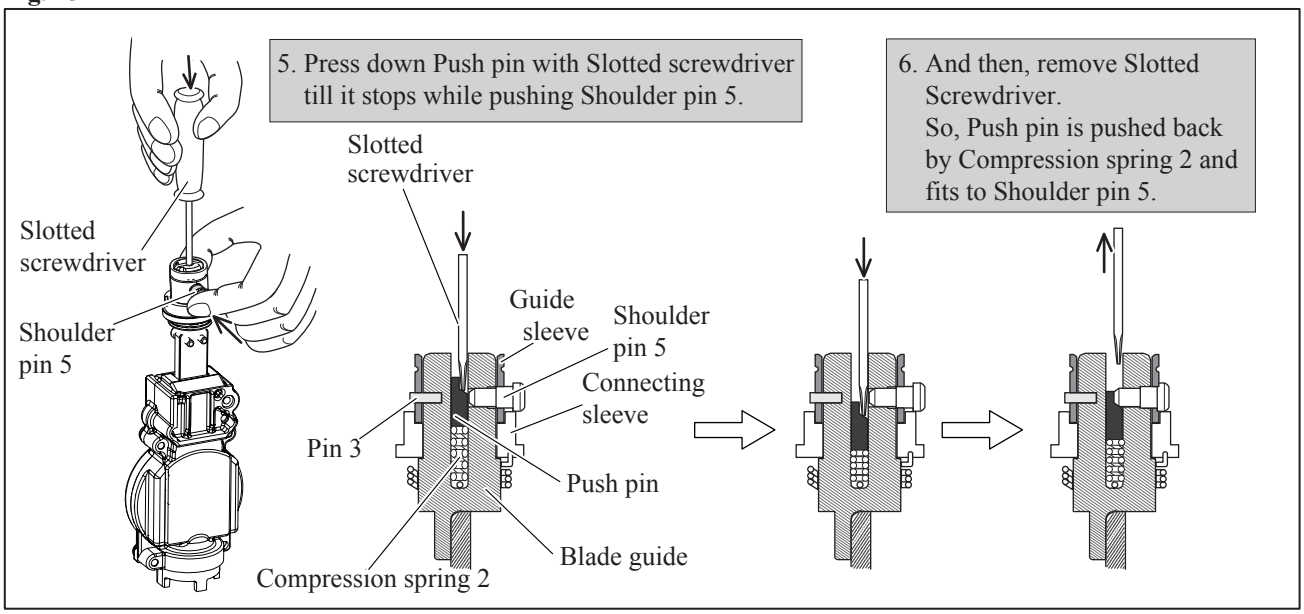

Fig. 16

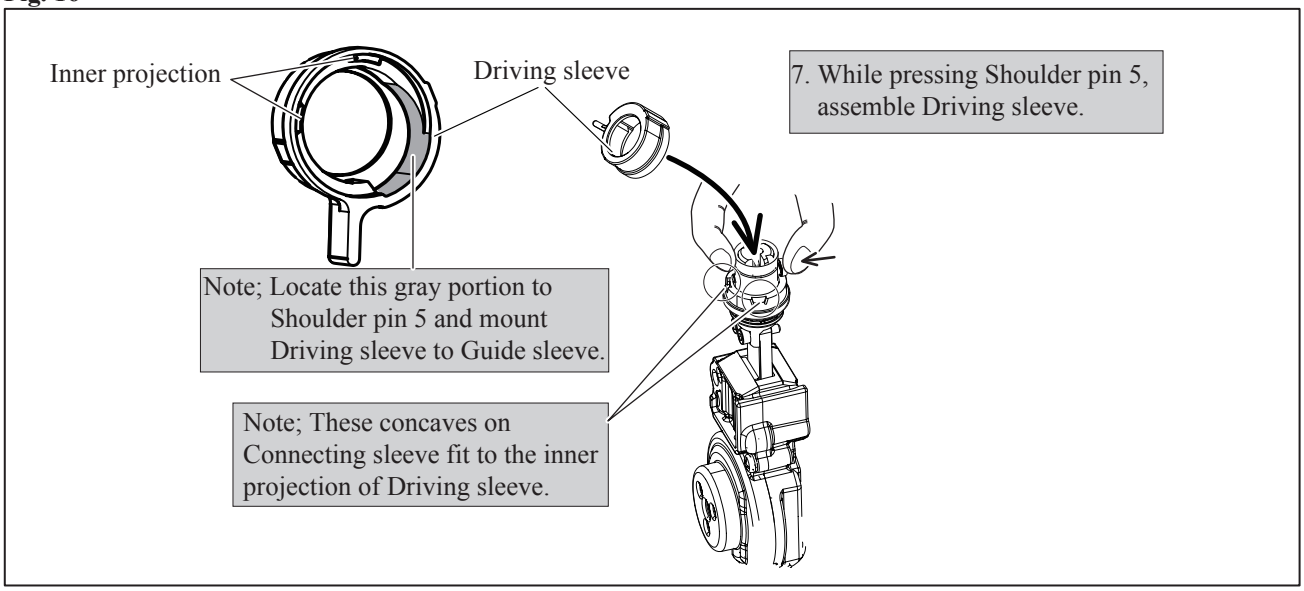

Repair

[3] DISASSEMBLY/ASSEMBLY

[3] -3. Toolless blade holder section (Model JR100D) (cont.)

ASSEMBLING

(1) Assemble Blade guide to Slider in case Blade guide is removed from Slider (**Fig. 9**).

Fig. 17

8. Hold Gear housing with vise and grip Connecting sleeve with Water pump pliers over a cloth so as not to damage it. Turn **Driving sleeve 90 degrees** while pressing it down. Now, Protrusions in the Driving sleeve presisely match to Depressions on Connecting sleeve and groove for Retaining ring 16 on Guide sleeve comes into your sight as drawn in **Fig. 18**.

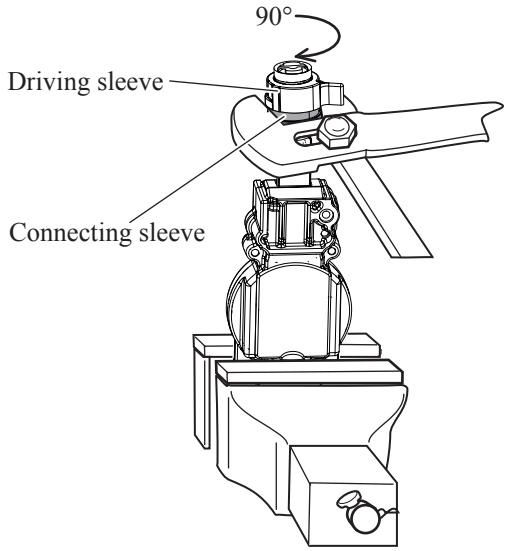

Fig. 18

9. Mount the Retaining ring 16 as drawn below.

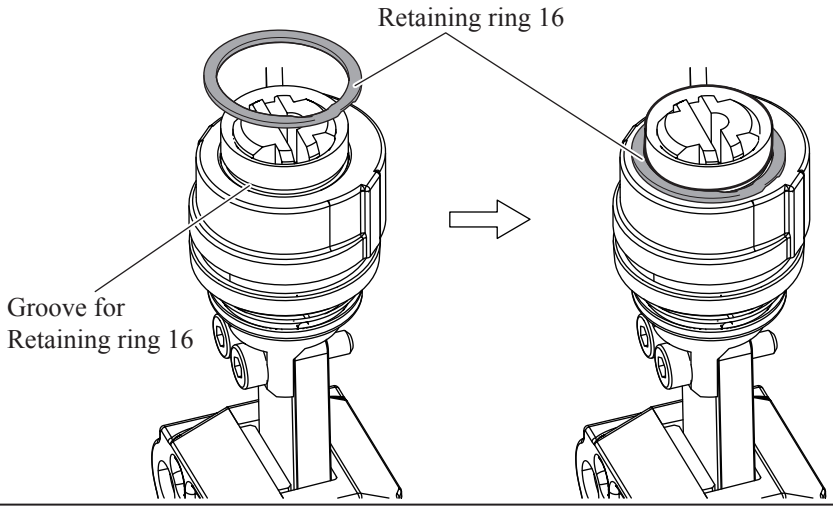

Repair

[3] DISASSEMBLY/ASSEMBLY

[3] -4. Switch lever F complete

DISASSEMBLING

(1) Disassemble Housing (R) (**Fig. 2**).
(2) Remove Switch lever section from Housing (L) and disassemble it as drawn in **Fig. 19**.

Fig. 19

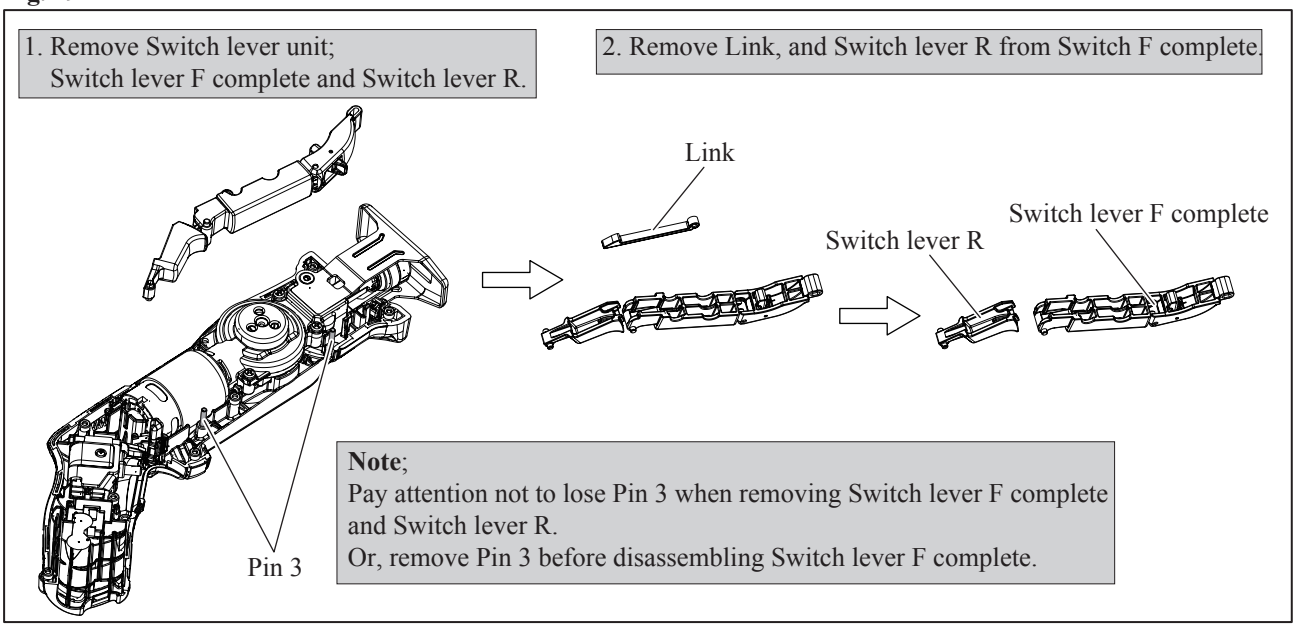

ASSEMBLING

(1) Mount Link to Switch lever F complete, and Switch lever R to the Link.
Assemble Switch lever unit to Housing (L).

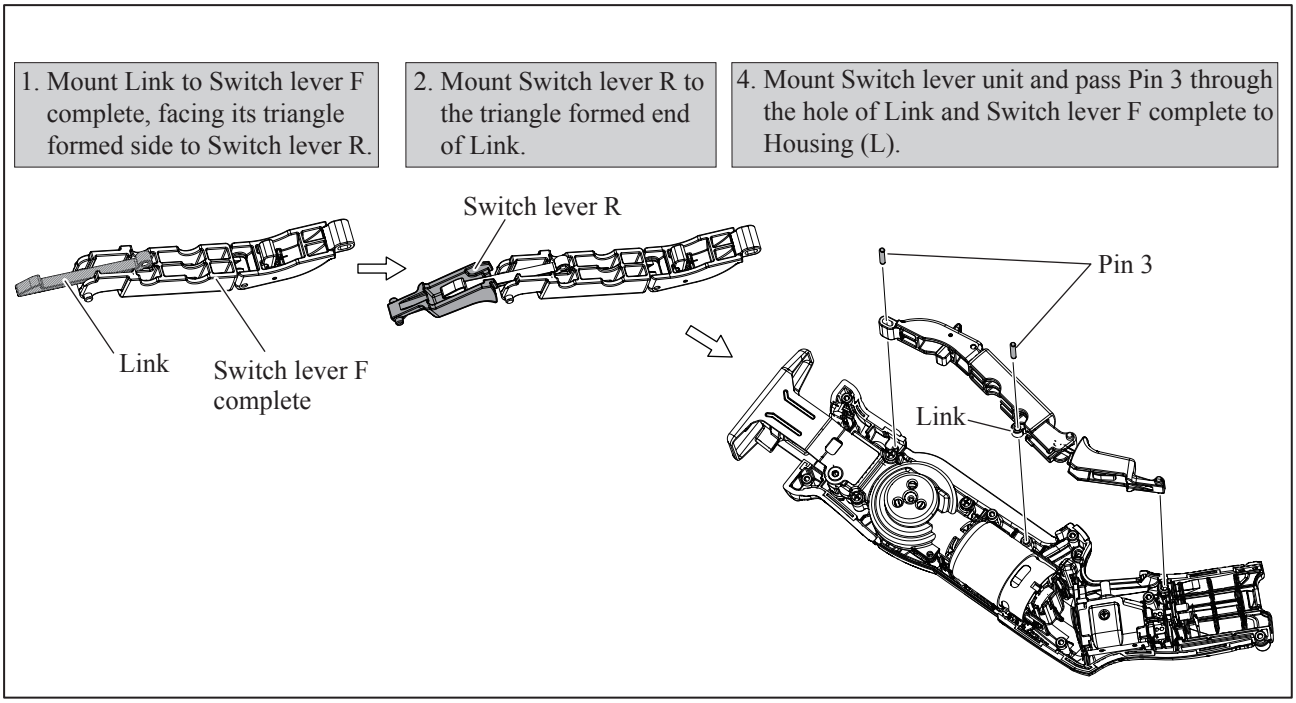

Circuit diagram

Fig. D-1

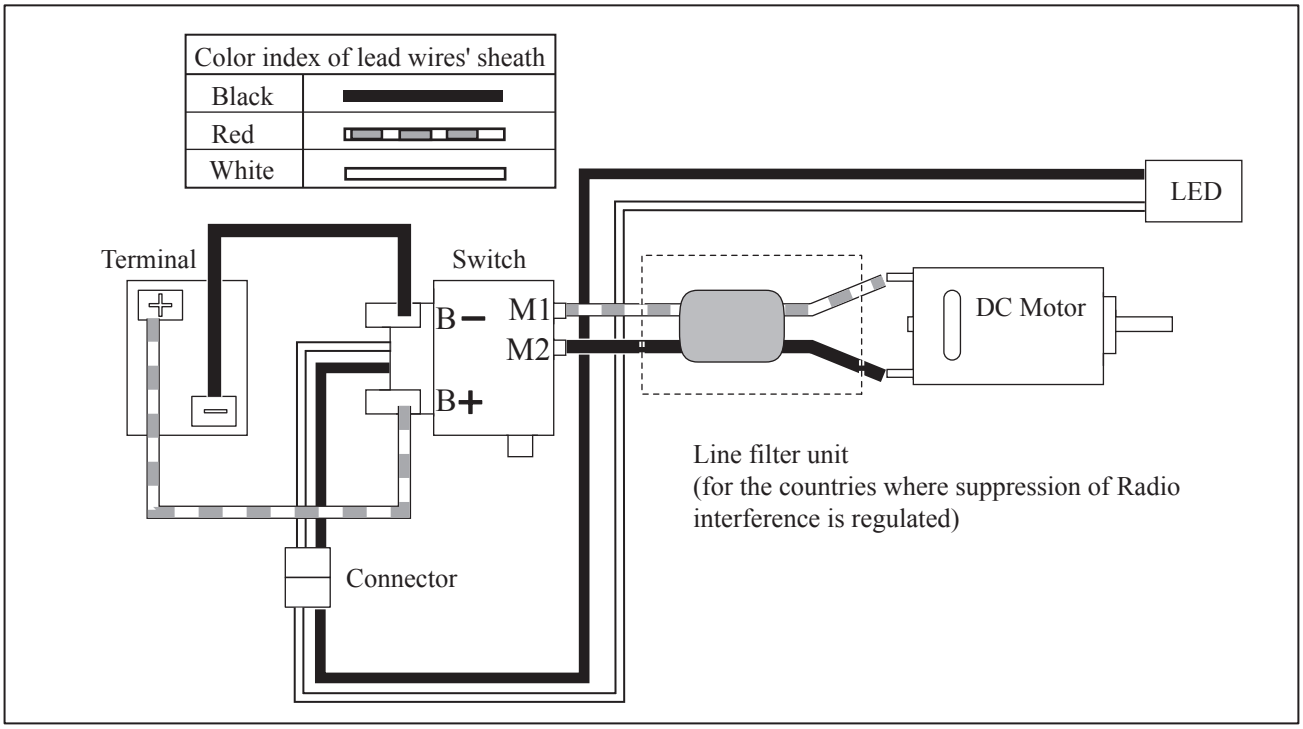

Wiring diagram

Fig. D-2

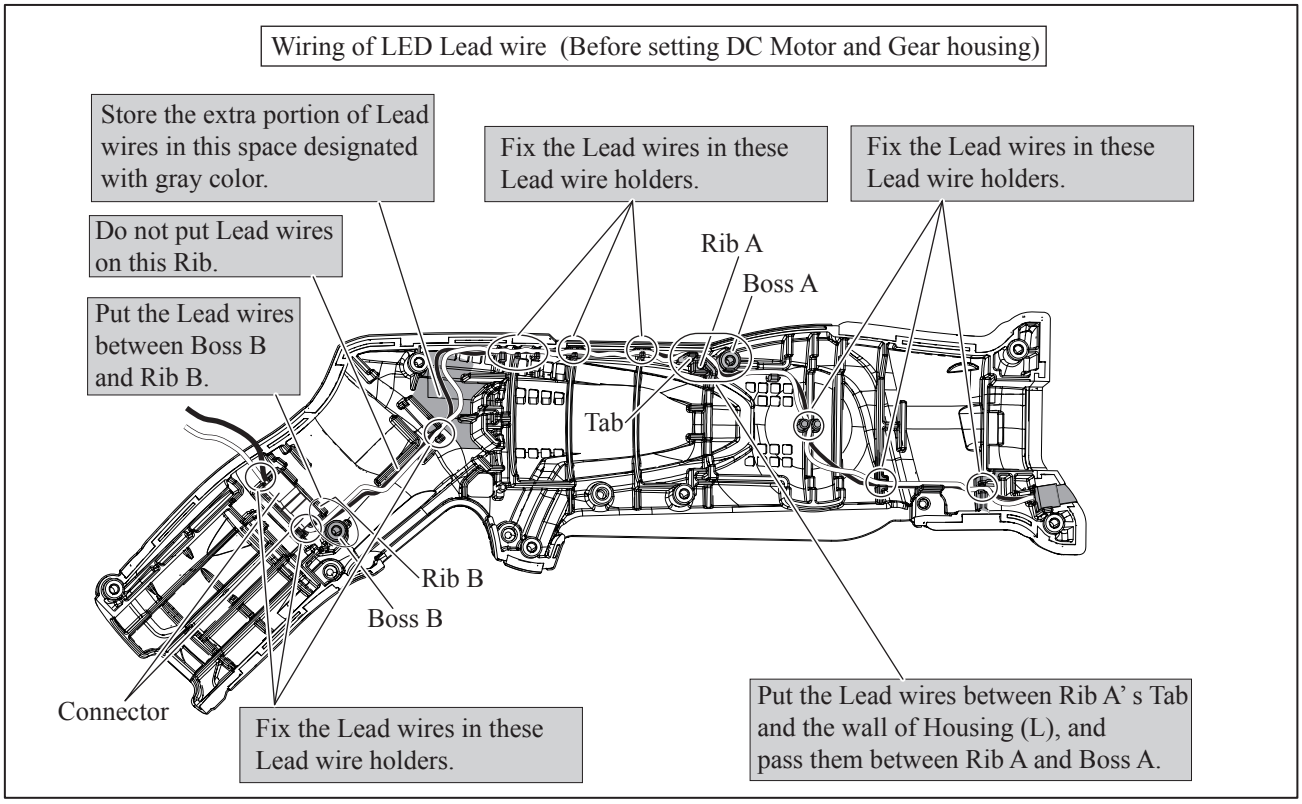

► Wiring diagram (cont.)

Fig. D-3

Wiring to DC Motor

Assemble DC Motor to Housing (L),
* the Lead wires must be faced to Housing (R) side.
* the Lead wire (black) must be located to the Switch trigger side.

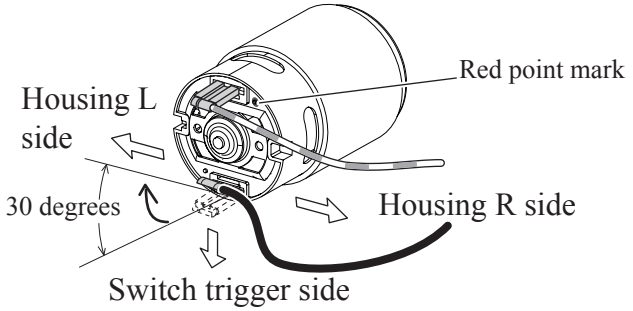

Bend the Terminal with black Lead wire 30 degrees toward the center so that the Terminal does not touch the rib for setting DC Motor.

Now, Switch can be mounted to Housing (L) as drawn in **Fig. D-5**.

Fig. D-4

Wiring to Terminal

Connect the Lead wires to Terminal as drawn below.

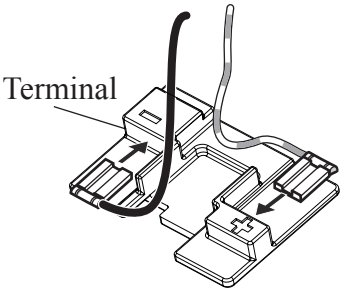

Fig. D-5

Wiring of Lead wires of DC Motor, Switch, Terminal in Housing (L)

Pass the Lead wires (black, red) between DC motor and Switch through Line filter when it is used.
And put the Line filter to this place.
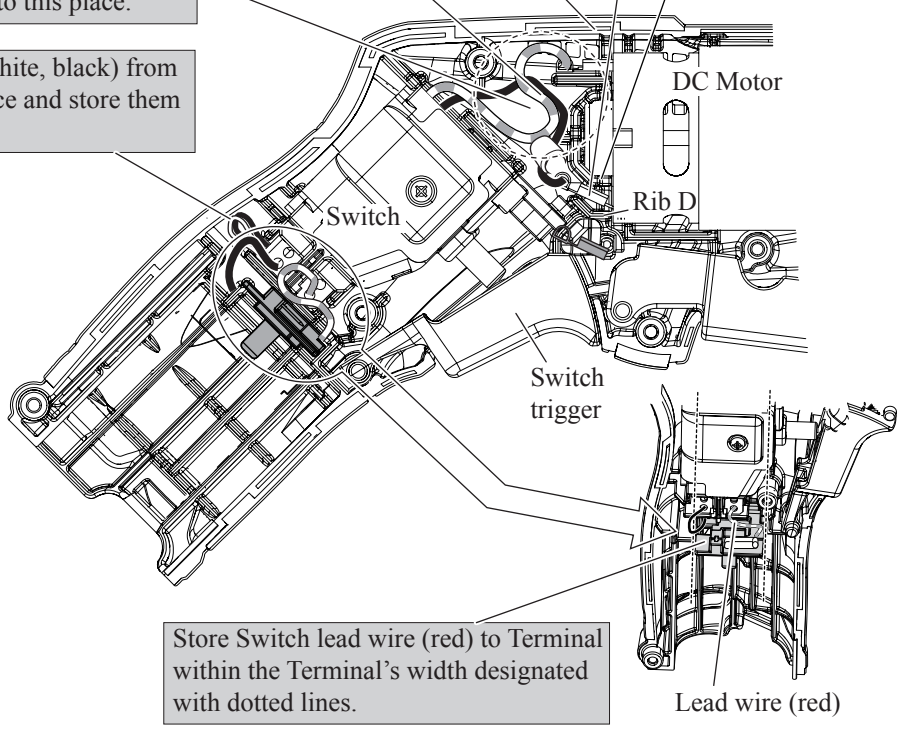
Route Lead wires (white, black) from connector to this place and store them in this place.