Model No. DF332D CORDLESS DRIVER DRILL

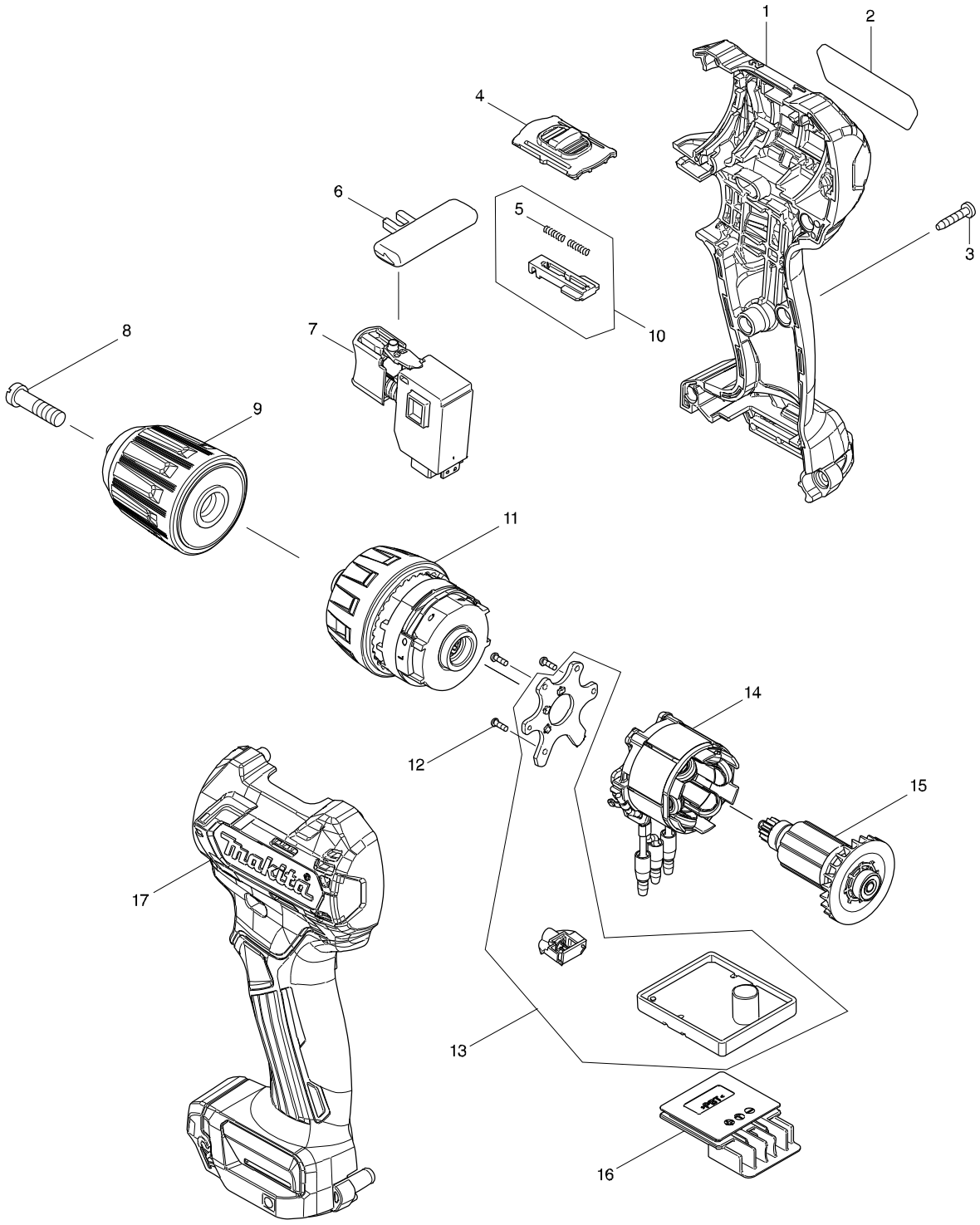

Model No. DF332D CORDLESS DRIVER DRILL

Item	Parts No.	Description	I/C	Qty	N/O	Opt. 1	Opt. 2	Note
001	183C34-7	HOUSING SET		1				
D10		INC. 17						
002	851T91-2	DF332D NAME PLATE		1				
003	266429-2	TAPPING SCREW 3X16		8				
004	456532-9	SPEED CHANGE LEVER		1				
005	233025-1	COMPRESSION SPRING 2		2				
006	419041-9	F/R CHANGE LEVER		1				
007	650689-0	SWITCH C3JW-2B		1				
008	251468-5	- FLAT HEAD SCREW M6X22		1				
009	763238-5	KEYLESS DRILL CHUCK 10		1				
010	123587-6	CHANGE LEVER ASS'Y		1				
D10		INC. 5						
011	123549-4	GEAR ASSEMBLY		1	*			
011-1	123868-8	GEAR ASSEMBLY	O	1				
012	266490-9	TAPPING SCREW PT 2X6		3				
013	620487-6	CONTROLLER		1	*			
013-1	620487-6	CONTROLLER	O	1				
C10	620553-9	LED CIRCUIT		1				
014	629178-6	STATOR		1				
015	619393-0	ROTOR		1				
016	644813-5	TERMINAL		1				
017	183C34-7	HOUSING SET		1				
D10		INC. 1						
A01	251314-2	+ SCREW M4X12		1				
A02	346909-5	HOOK		1				
A03	784202-3	PHILLIPS BIT 2-45		1				
A04B	456128-6	BATTERY COVER		1				
A05B	***DC10SB	DC10SB BATTERY CHARGER		1				
D10		COMPO-PARTS						
A06B	197396-9	BATTERY BL1021B SET		2				
A07B	821661-1	PLASTIC CARRYING CASE		1				
C10	417724-5	LATCH		2				

Please order the parts with a part number.

Print Date 27/07/2016