Model No. DDF456 CORDLESS DRIVER DRILL

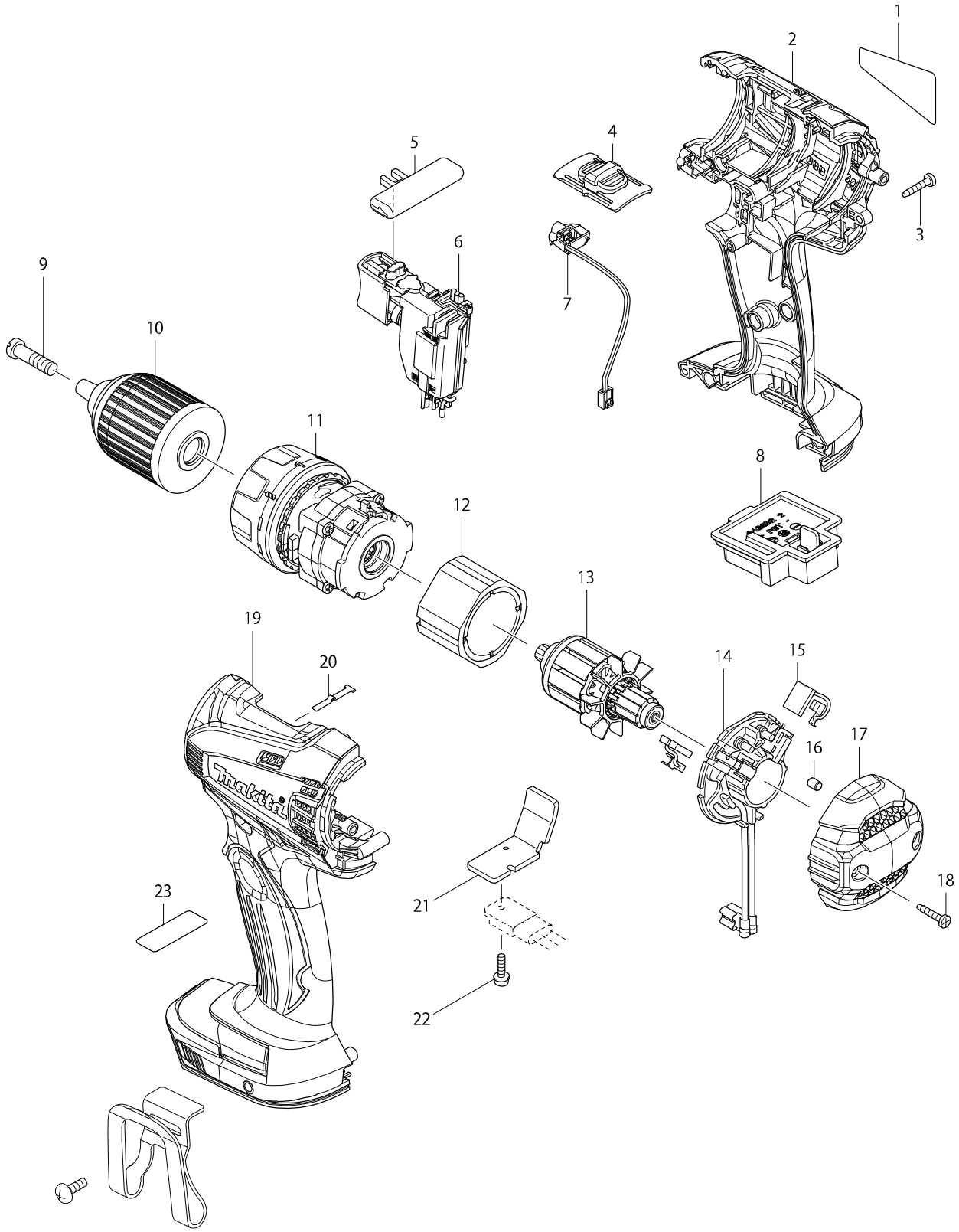

Model No. DDF456 CORDLESS DRIVER DRILL

Item	Parts No.	Description	I/C	Qty	N/O	Opt. 1	Opt. 2	Note
001	815C16-8	DDF456 NAME PLATE		1				
002	188932-2	HOUSING SET		1				
D10		INC. 19						
003	266429-2	TAPPING SCREW 3X16		9				
004	126289-3	SPEED CHANGE LEVER ASSEMBLY		1				
C10	233438-6	COMPRESSION SPRING 4		2				
005	419250-0	F/R CHANGE LEVER		1				
006	650637-9	SWITCH		1	*			
006-1	650731-7	SWITCH C3HZ-1A-TLMS	<	1				
007	620012-3	LED CIRCUIT		1				
008	643852-2	TERMINAL		1				
009	251468-5	- FLAT HEAD SCREW M6X22		1				
010	763175-3	KEYLESS DRILL CHUCK 13		1				
011	125831-7	GEAR ASSEMBLY		1	*			
011-1	126459-4	GEAR ASSEMBLY	<	1				
012	638425-4	YOKE UNIT		1				
013	619263-3	ARMATURE		1				
014	638494-5	BRUSH HOLDER COMPLETE		1				
015	194427-5	CARBON BRUSH CB-440		1				
016	263032-0	RUBBER PIN 4		2				
017	452205-2	REAR COVER		1				
018	266429-2	TAPPING SCREW 3X16		2				
019	188932-2	HOUSING SET		1				
D10		INC. 2						
020	232182-2	LEAF SPRING		1				
021	689170-4	HEAT SINK		1				
022	911013-5	PAN HEAD SCREW M3X10		1				
A01	251314-2	+ SCREW M4X12		1				
A02	346449-3	HOOK		1				
A03	784637-8	+- BIT 2-45		1				
A04	141856-3	PLASTIC CARRYING CASE COMPLET		1				
C10	162302-3	LATCH		2				
C20	324207-7	SHAFT		1				
C30	451749-9	HANDLE		1				
A05	450128-8	BATTERY COVER		1				
A06	***DC18RC	DC18RC FAST CHARGER		1				
A07	194513-2	BATTERY BL1815 SET		2				
A08	802P28-8	DDF456RHE PLASTIC CASE LABEL		2				

Please order the parts with a part number.

Print Date 23/12/2014