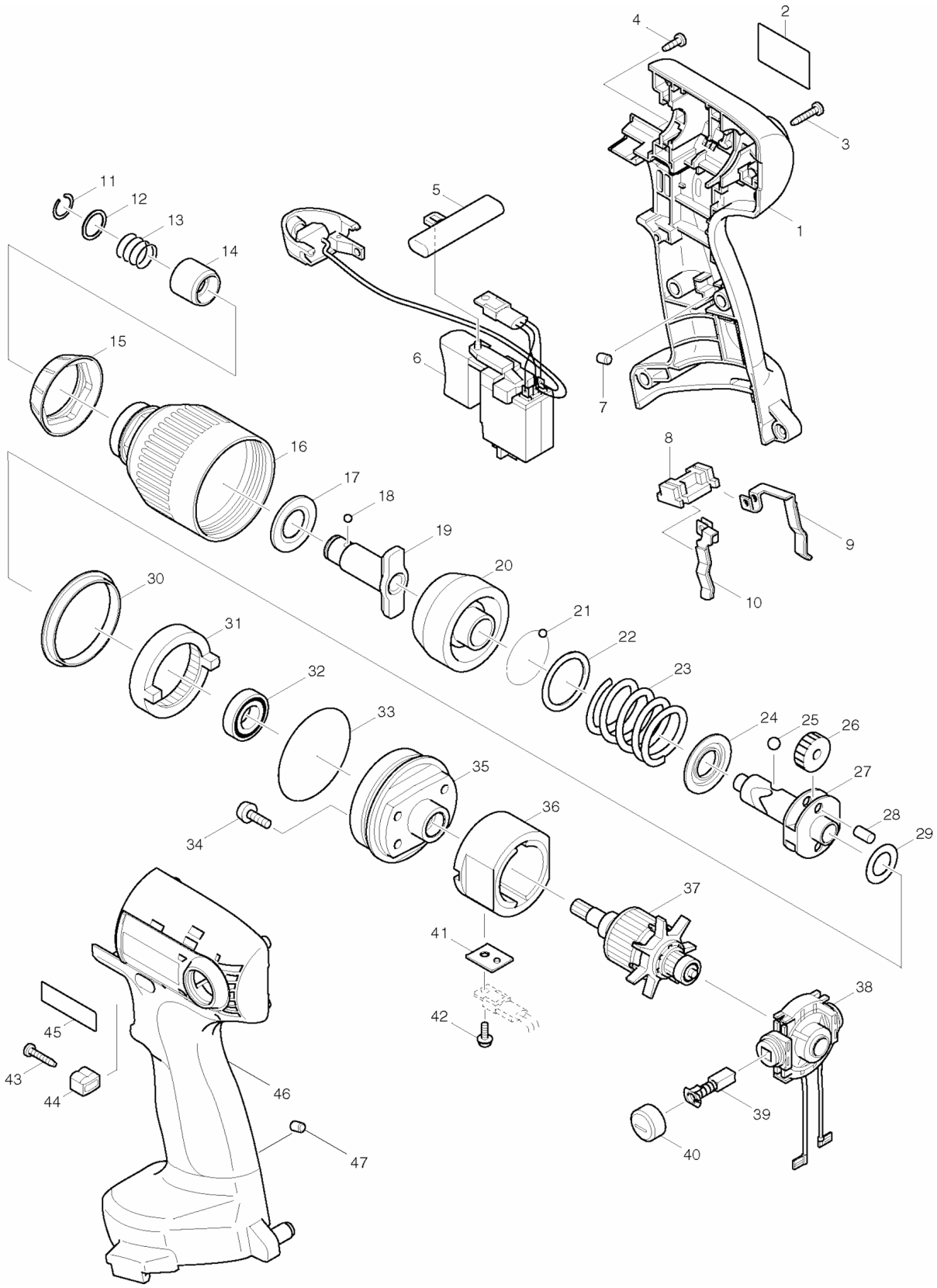
1
2
3
4
5
6
7
8
9
10
11
12
13
14
15
16
17
18
19
20
21
22
23
24
25
26
27
28
29
30
31
32
33
34
35
36
37
38
39
40
41
42
43
44
45
46
47

Products with multiple versions are listed in subsiding order with the newest version on top not indented

Fig #	Part ID	Part Name	Quantity
1	183777-3	HOUSING SET, 6980FD	1
	183774-9	HOUSING SET, 6980FDWDE	
2	860199-1	NAME PLATE,6980FDWDE	1
3	266130-9	TAPPING SCREW PT3X16, LXPH03	8
4	266007-8	TAPPING SCREW 3X10, 9557NB	1
5	416079-5	F/R CHANGE LEVER, 6933FD	1
6	638326-6	SWITCH UNIT, 6935FDWDE	1
7	263024-9	RUBBER PIN 4, 6918DWD	1
8	687085-9	HOLDER, 6233DWA	1
9	654168-0	SPRING TERMINAL (+), 6933FD	1
10	654169-8	SPRING TERMINAL (-), 6233DWA	1
11	231951-8	RING SPRING 11, LXDT01	1
12	267085-1	FLAT WASHER 12, LXDT08	1
13	233005-7	COMP.SPRING 13,LXDT01	1
14	324420-7	SLEEVE, LXDT08	1
15	421847-3	BAMPER, 6980FDWDE	1
16	153808-2	HAMMER CASE CPL., 6980FDWDE	1
17	261108-7	NYLON WASHER 14, LXDT01	1
18	216001-0	STEEL BALL 3.5, LXDT08	2
19	324432-0	ANVIL M, 6980FDWDE	1
20	324262-9	HAMMER, 6980FDWDE	1
21	216001-0	STEEL BALL 3.5, LXDT08	24
22	267175-0	FLAT WASHER 24, LXDT08	1
23	233274-0	COMPRESSION SPRING 25, 6918DWD	1
24	267766-7	CUP WASHER 14, LXDT08	1
25	216011-7	STEEL BALL 5.6, LXDT08	2
26	226336-1	SPUR GEAR 22, LXDT08	2
27	324220-5	SPINDLE, BTW121SA	1
28	256253-1	PIN 5, LXDT08	2
29	267212-0	FLAT WASHER 12, LXDT08	1
30	257254-2	RING 41, 6980FDWDE	1
31	227112-6	INTERNAL GEAR 51,6980FDWDE	1
	227043-9	N/A	
32	211150-8	BALL BEARING 6901ZZ, 6916FD	1
33	213620-3	O-RING 46, BSS730SH	1
34	911516-9	P.H. SCREW M4X12, JR180DWB	4
35	158079-6	INTERNAL GEAR CASE CPL.,6936FD	1
	317597-5	INTERNAL GEAR CASE, 6980FDWDE	
36	638511-1	YOKE UNIT, 6980FD	1
	638155-7	YOKE UNIT, 6980FDWDE	
37	619084-3	ARMATURE, 6980FDWDE	1
38	638156-5	ENDBELL CPL.,6932FD	1
39	CB434	CARBON BRUSH SET, 195020-8	1
	195020-8	CARBON BRUSH SET, 195020-8	
	193466-2	CARBON BRUSH CB-434 SET, BTW121SA	
40	643933-2	HOLDER CAP, 6908DWA	2
41	689096-0	FET SPACER, 6918DWD	1
42	266170-7	TAPPING SCREW ST3X8, 6918DWD	1
43	266130-9	TAPPING SCREW PT3X16, LXPH03	1
44	313118-1	STOPPER, 6980FDWDE	1
45	819720-3	MAKITA LABEL, 3707fc	1
46	183777-3	HOUSING SET, 6980FD	1
	183774-9	HOUSING SET, 6980FDWDE	
47	263024-9	RUBBER PIN 4, 6918DWD	1
	414938-7	BATTERY COVER, 6222DWE	2
	192598-2	BATTERY 1222, 12VDC 2.0AH,6213DWAE	2
	***DC1414	14V CHARGER	1
	824763-2	PLASTIC TOOL CASE,6935fdwdex	1

824534-7	PLASTIC TOOL CASE, 6233DWBLE	
183763-4	PLASTIC TOOL CASE, 6217DWDE	
324362-5	HOOK, 6935FD	1
194156-0	HOOK SET, 6339DWDE	
810145-4	N/A	1